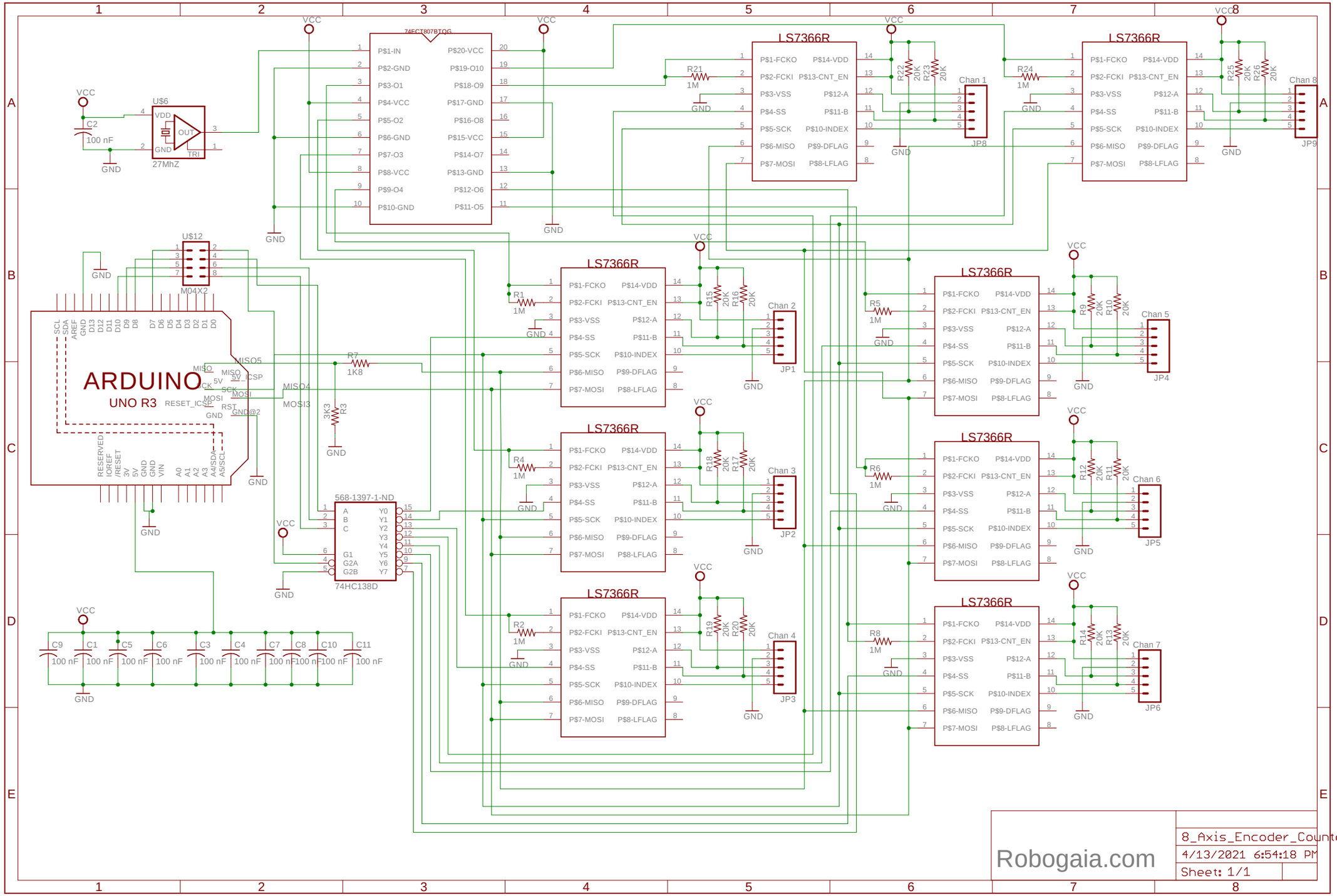
ARDUINO
UNO R3
74FCT807BTQG
LS7366R
74HC138D
568-1397-1-ND
M04X2
U$6
27MhZ
Chan 1
Chan 2
Chan 3
Chan 4
Chan 5
Chan 6
Chan 7
Chan 8
JP1
JP2
JP3
JP4
JP5
JP6
JP8
JP9
VCC
GND
Robogaia.com
8_Axis_Encoder_Counter_Shield_Arduino
4/13/2021 6:54:18 PM
Sheet: 1/1